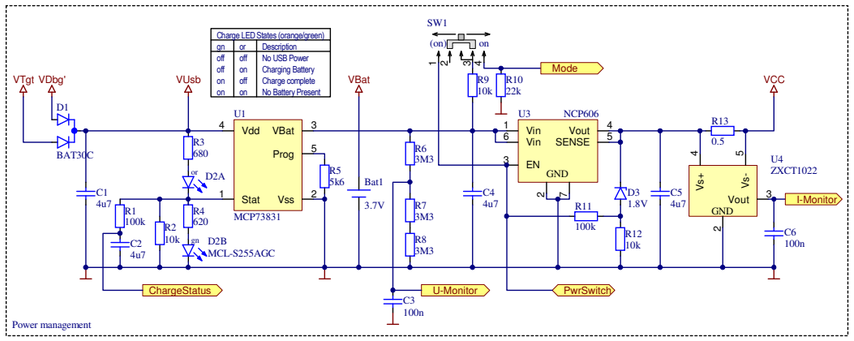

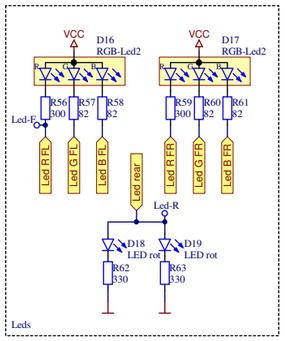

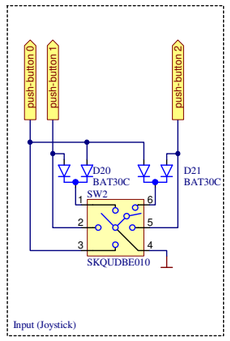

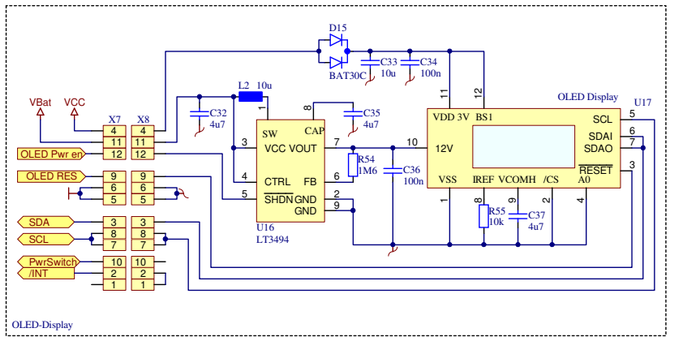

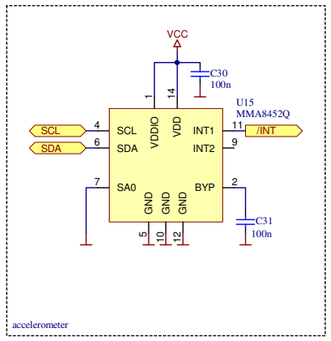

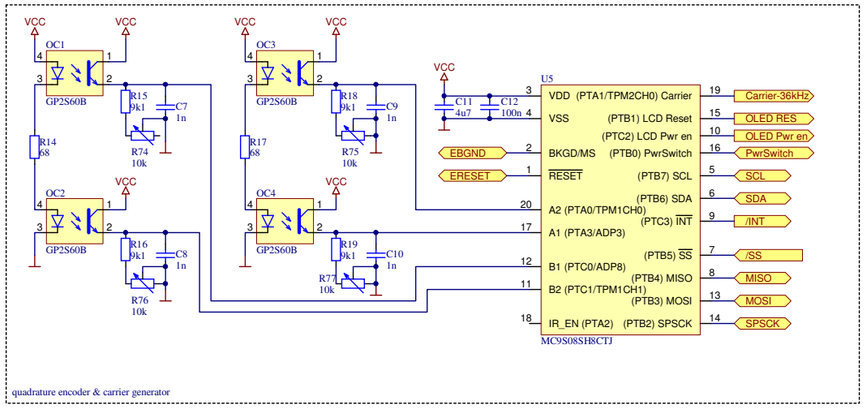

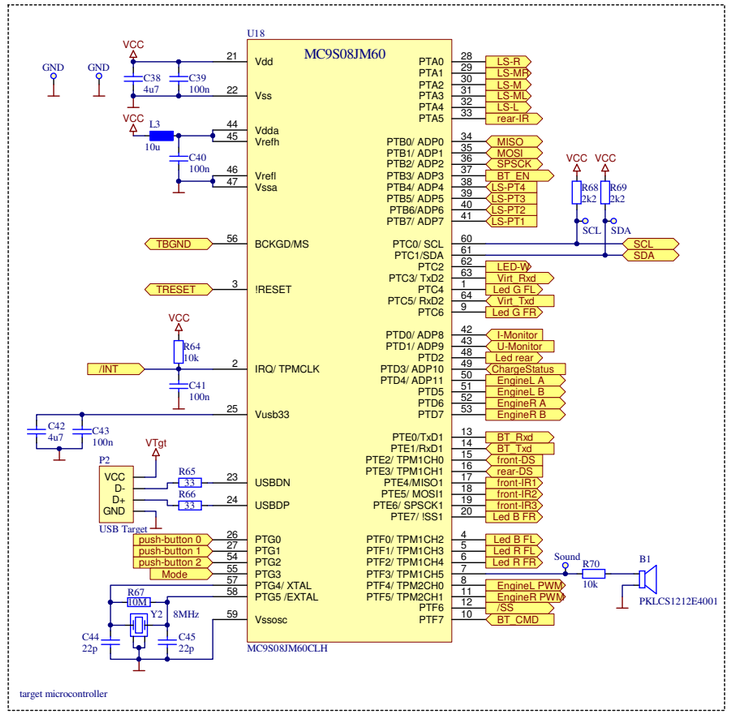

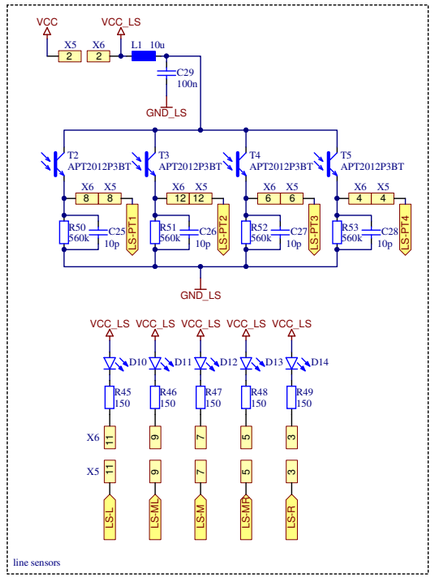

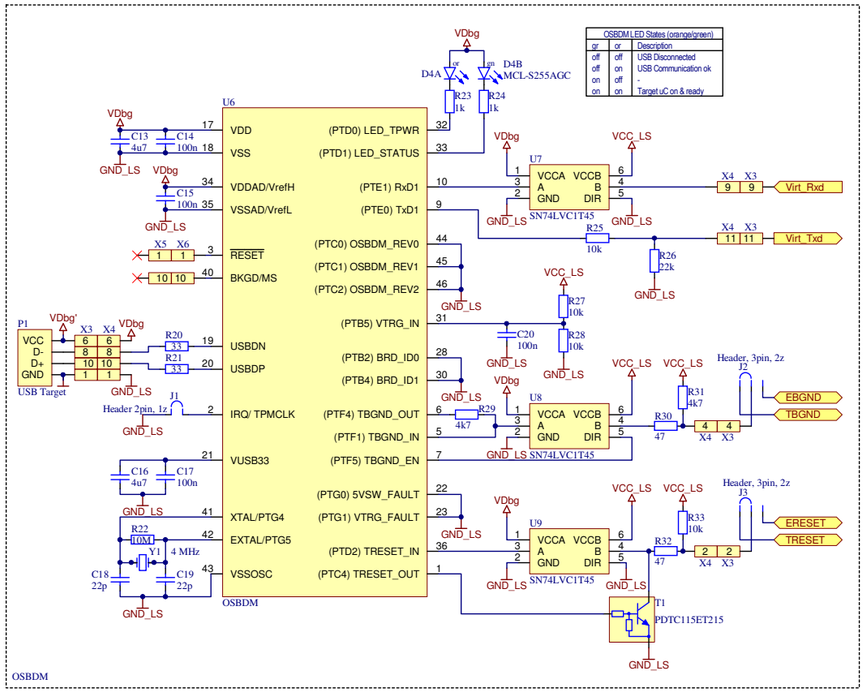

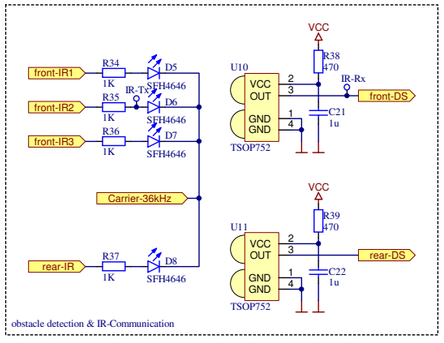

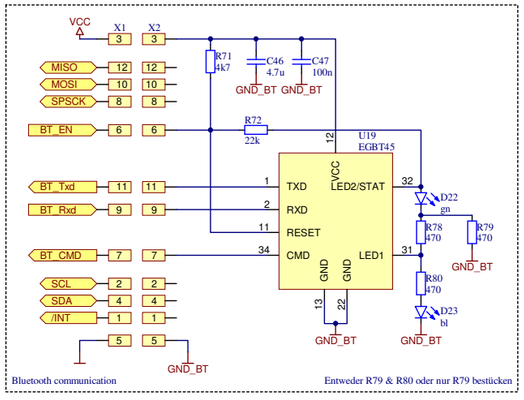

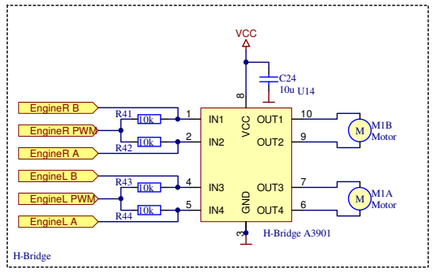

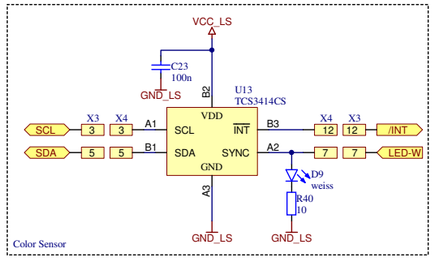

S11

MC-Car		
Project: MCBot	Size: A3	Rev.: 1.2
Drawn by: Christian Jost	Sheet 1 of 1	
Date: 03.10.2012 File: MCBot1.SchDoc		

Lucerne University of Applied Sciences and Arts
HOCHSCHULE LUZERN
Technik & Architektur